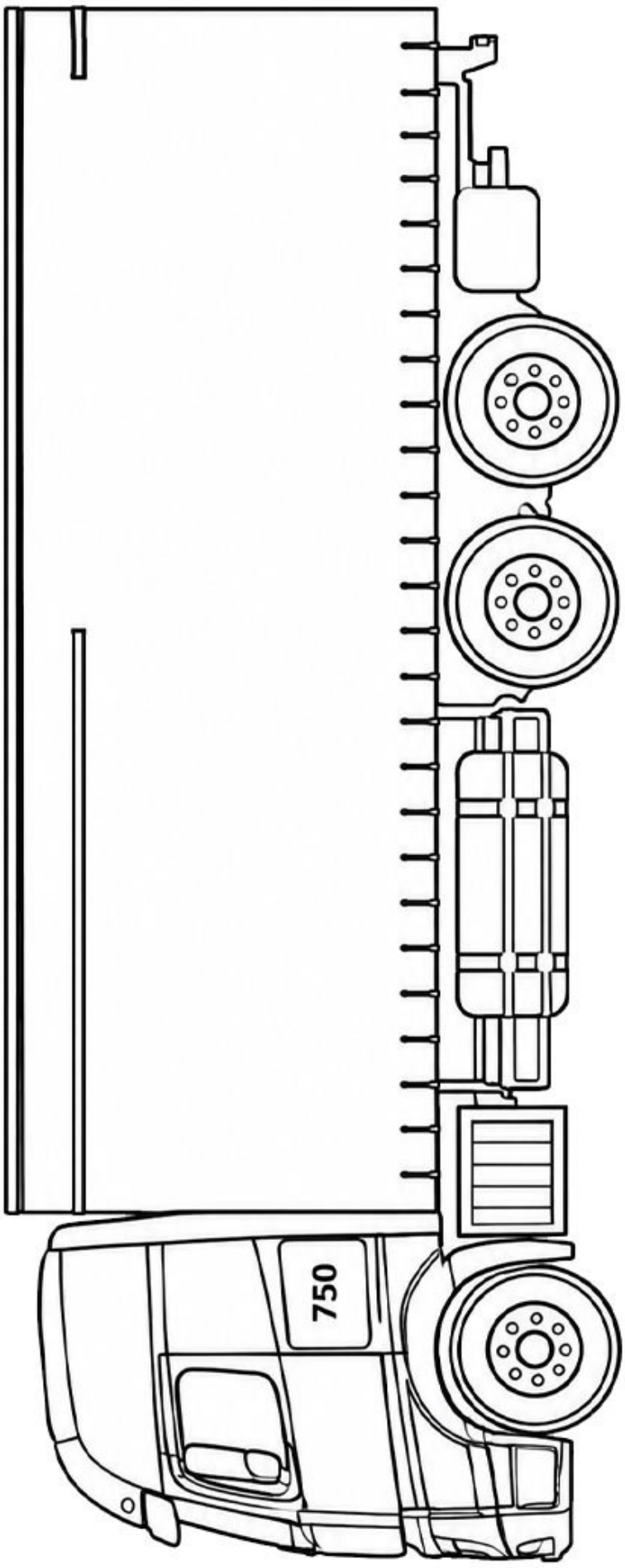
750